# High-precision system components

## for more sustainable mobility

www.PhotonAG.com

Photon
Technology in Motion

© Photon AG / vertraulich confidential / H.Alder@PhotonAG.com

# Who we are

*Your reliable partner in Berlin*

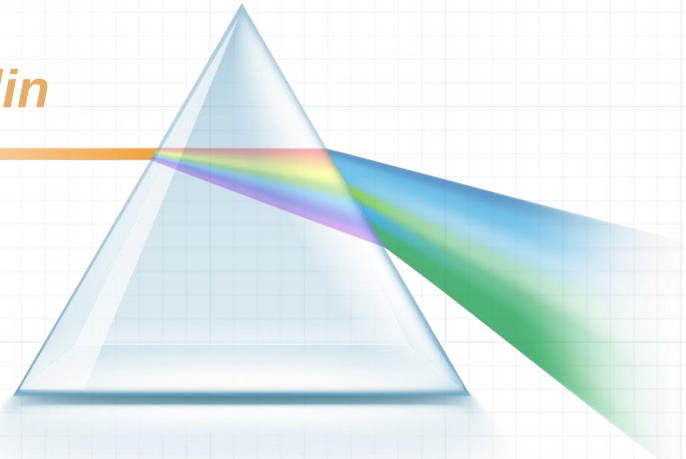

**Technology Consulting**
incl. manufacturing concepts

**Process Development**
incl. feasibility studies

**Manufacturing**
series* & prototypes

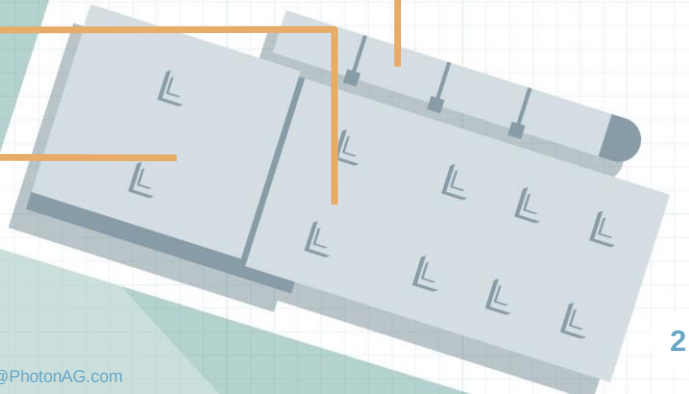

** Rail vehicle production: small series | Automotive: small series & prototypes | Shipbuilding: individual production*

Founded in 1998 as a pioneer of laser beam welding, Photon has continually extended its portfolio, production capacities and level of expertise, enabling its clients to maximize on the benefits of laser beam welding and other innovative manufacturing technologies for their products.

- Extensive engineering and systems expertise from Germany
- Development, planning, management and manufacturing from a single source
- Owner-managed medium-sized company since 1998
- Long-term growth strategy and focus on sustainable client relations
- A team of 200 experienced, dedicated employees

Photon
Technology in Motion



© Photon AG / vertraulich confidential / HAlder@PhotonAG.com

# What we do

Photon develops, optimizes and manufactures complex lightweight components and assemblies made of steel, stainless steel, aluminum, titanium and innovative materials with a focus on sustainable mobility.

- Reducing weight & material usage
- Reducing energy consumption
- Reducing carbon emissions
- Reducing maintenance costs
- Extending product lifetime
- Maximizing reliability & operating safety

Photon
Technology in Motion



© Photon AG / vertraulich confidential / H.Alder@PhotonAG.com

# Making mobility more sustainable: our contribution

**Resource-saving production** → **Less energy and material**

**Weight reduction** → **Less emissions and lower operating costs**

**Quality and precision** → **Less maintenance and longer-lasting products**

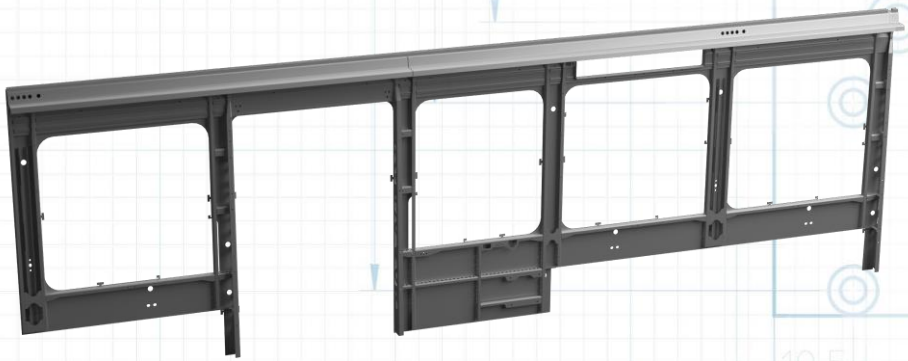

## Average savings for streetcars due to laser versus conventional design ...

**... weight:**
**-20 %**
per BIW*

* Calculation compares BIW weight of a 20 m streetcar optimized for laser beam welding to a conventional resistance spot welding design.

**... energy costs:**
**€-24 million**
per fleet*

* Calculation applies to the reduction in electrical energy costs for a standard city fleet of 300 trains (20 m twin cars) over their lifetime of 25 years (85,000 km/train/year) caused by 20% BIW weight savings as a re- sult of laser optimized lightweight design compared to conventional resistance spot welding design. (Based on an average price of €0.45/kWh over 25 years. Higher manufacturing costs of €4 million for laser-based production are taken into account.)

**... $CO_2$ emissions:**
**-36,000 t**
per fleet*

* Calculation applies to the reduction in electrical energy consumption for a standard city fleet of 300 trains (20 m twin cars) over their lifetime of 25 years (85,000 km/train/year) caused by 20% BIW weight savings as a result of laser optimized lightweight design compared to conventional resistance spot welding design. (Conversion rate: 0.42 kg $CO_2$/kWh)

Photon
Technology in Motion



© Photon AG / vertraulich confidential / H.Alder@PhotonAG.com

# Customers benefits of laser welded steel design:

1. **Weight:** ▶ equal to aluminum
   (-20% vs conventional steel design)

2. **Space:** ▶ better than aluminum
   (inner width & windowsize)

3. **$CO_2$ Footprint:** ▶ best in class
   (material production & lightweight)

4. **Lifetime costs:** ▶ better than aluminum
   (energy consumption, maintenance & repair)

Photon
Technology in Motion



© Photon AG / vertraulich confidential / H.Alder@PhotonAG.com

# Customers Railway Industry

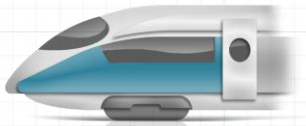

Rail cars and locomotives

SIEMENS

ŠKODA

STADLER

ALSTOM

Talgo

pesa

Photon
Technology in Motion



© Photon AG / vertraulich confidential / H.Alder@PhotonAG.com

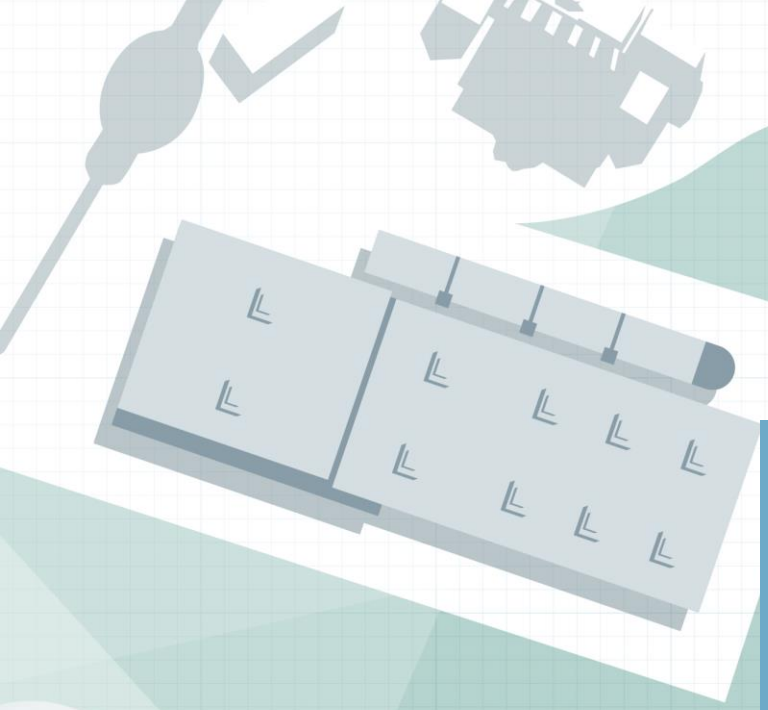

**Photon Laser Manufacturing GmbH**

Staakener Str. 53-63

13581 Berlin

Tel. +49 (0) 30 36 40 88-0

PLM@PhotonAG.com

www.PhotonAG.com

Photon

Technology in Motion

© Photon AG / vertraulich confidential / H.Alder@PhotonAG.com